Sept. 10, 1963 R. MERZ 3,103,212

SEMI-AUTOMATIC GAS POWERED GUN

Filed Jan. 21, 1959 3 Sheets-Sheet 1

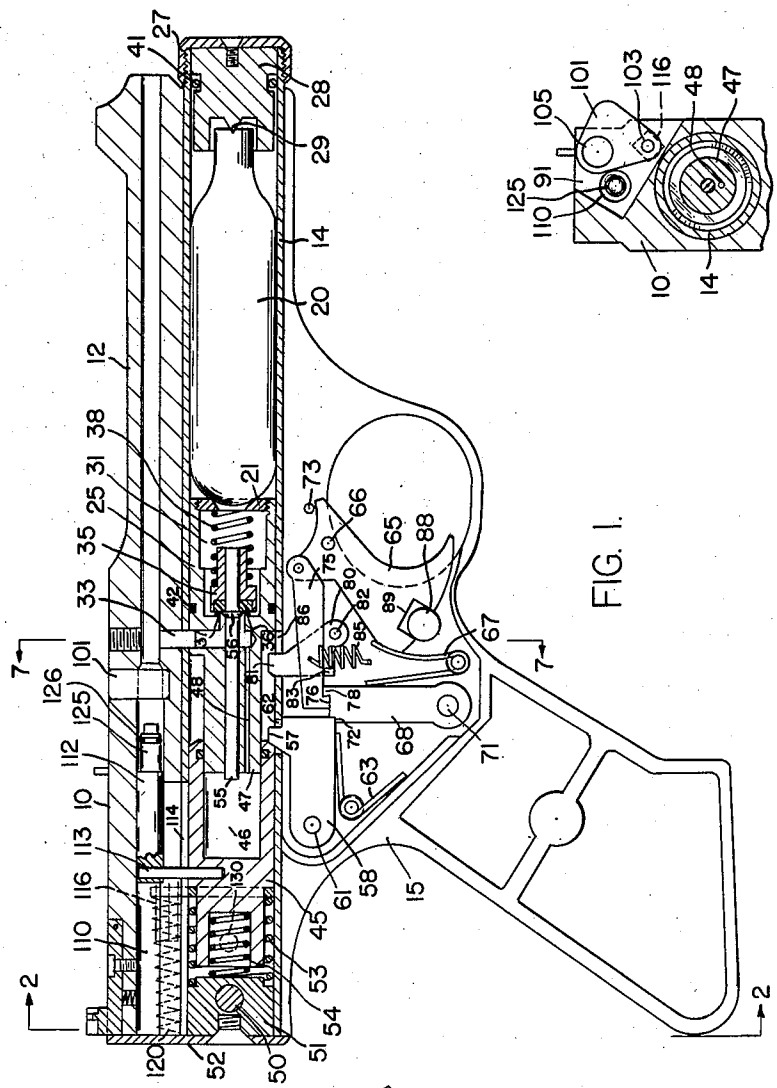

FIG. 1.

FIG. 6.

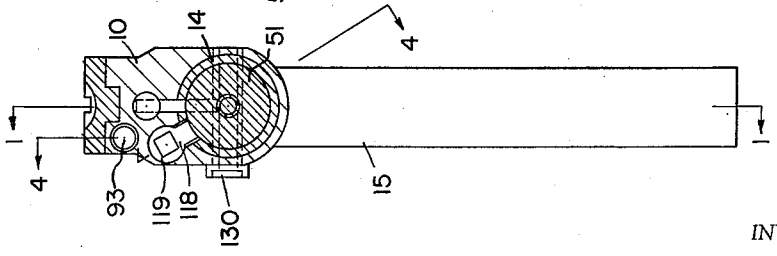

FIG. 2

INVENTOR.
RUDOLF MERZ
BY
Attorney

Sept. 10, 1963 R. MERZ 3,103,212

SEMI-AUTOMATIC GAS POWERED GUN

Filed Jan. 21, 1959 3 Sheets-Sheet 2

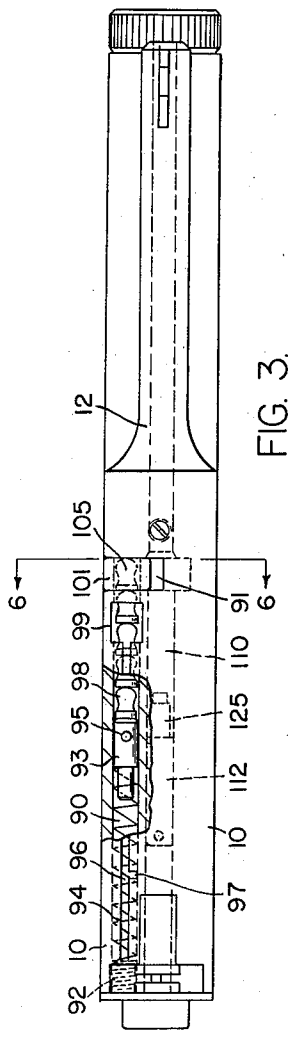

FIG. 3.

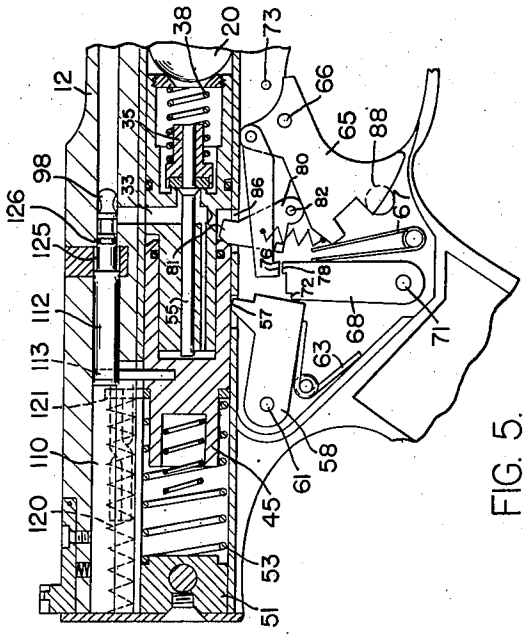

FIG. 5.

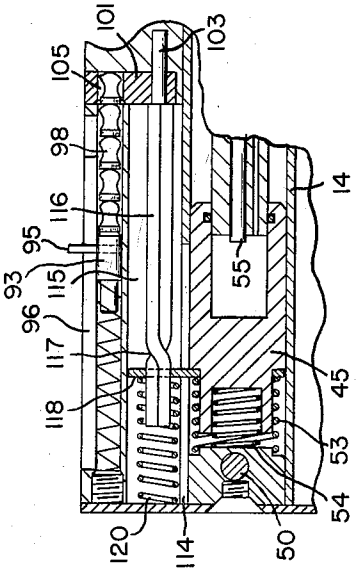

FIG. 4.

INVENTOR.
RUDOLF MERZ
BY
Attorney

Sept. 10, 1963 R. MERZ 3,103,212

SEMI-AUTOMATIC GAS POWERED GUN

Filed Jan. 21, 1959 3 Sheets-Sheet 3

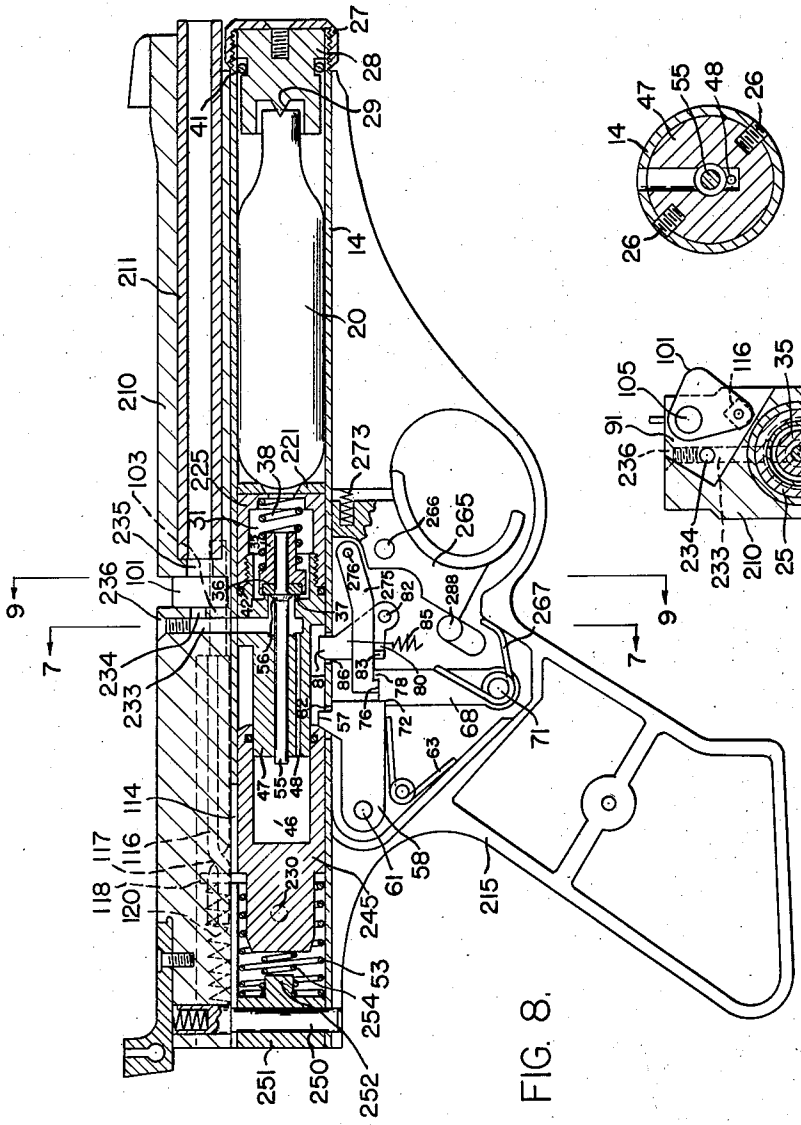

FIG. 8.

FIG. 7.

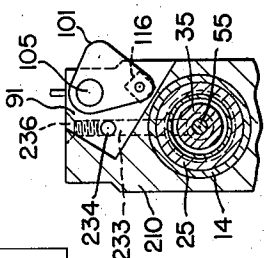

FIG. 9

INVENTOR.
RUDOLF MERZ
BY
Attorney

United States Patent Office 3,103,212 Patented Sept. 10, 1963

3,103,212

SEMI-AUTOMATIC GAS POWERED GUN

Rudolf Merz, Rochester, N.Y., assignor to Crosman Arms Company, Inc., Fairport, N.Y., a corporation of New York

Filed Jan. 21, 1959, Ser. No. 788,220
10 Claims. (Cl. 124—11)

This invention relates to a gas powered gun, and more particularly to a semi-automatic gas powered gun of the type using a replaceable cartridge for supplying the gas which propels the projectile from the gun.

One of the objects of this invention is to provide a semi-automatic gas powered gun having improved means for cocking and loading the gun.

Another object of this invention is to provide an improved gas powered gun which will propel a plurality of projectiles in succession simply by pressing the trigger without manually reloading and cocking the gun.

Another object of this invention is to provide an improved gas powered gun which loads a projectile during the forward movement of the hammer toward firing position.

A further object of this invention is to provide an improved gas powered gun which is automatically cocked for the next shot by the gas which fires the gun.

A further object of this invention is to provide an improved semi-automatic gas powered gun having an improved trigger mechanism for operating the gun.

A still further object of this invention is to provide an improved gas powered semi-automatic gun of simple, inexpensive construction, having relatively few moving parts, and which is dependable and definite in its operation.

Other objects of this invention will be apparent from the drawings, the specification, and the appended claims.

In the drawings:

FIG. 1 is a sectional view of a pistol constructed according to one embodiment of the invention, this view being taken on line 1—1 of FIG. 2;

FIG. 2 is a sectional view of this embodiment taken at line 2—2 of FIG. 1 and looking in the direction of the arrows;

FIG. 3 is a plan view of the embodiment shown in FIG. 1 with the parts broken away to show a portion of the interior;

FIG. 4 is a fragmentary section of the gun taken on line 4—4 of FIG. 2 and showing the position of the loading mechanism when the gun is in a cocked position;

FIG. 5 is a fragmentary sectional view similar to FIG. 1, showing the positions of the trigger mechanism, the hammer, and the bolt or pellet pusher with the trigger depressed just prior to release of the propelling gas;

FIG. 6 is a fragmentary sectional view showing the position of the loading mechanism of the gun when the gun is in a cocked position, the view being taken on line 6—6 of FIG. 3 and looking in the direction of the arrows;

FIG. 7 is an enlarged fragmentary section taken at line 7—7 of FIGS. 1 and 8;

FIG. 8 is a sectional view of a modified form of the gun; and

FIG. 9 is a fragmentary sectional view taken on line 9—9 of FIG. 8.

The invention is illustrated in the drawings as applied to gas-powered pellet-firing semi-automatic pistols. In each embodiment, the pistol has a magazine for holding a plurality of projectiles. When the trigger is pulled, the hammer of the gun is released. During its forward movement the hammer operates a loading mechanism for transferring a projectile from the magazine to firing position. Then the hammer opens a poppet valve momentarily to permit gas to force the projectile from from the barrel of the gun. At the limit of its forward travel the gas forces the hammer back to its cocked position, and conditions the loading mechanism for the next firing. In one embodiment, the hammer carries a bolt or pellet pusher, which pushes the pellet from the loading mechanism into firing position in the barrel just prior to opening the poppet valve. In the other embodiment, the gas which is released, when the hammer opens the poppet valve, forces the pellet out of the loading mechanism into and through the barrel.

Referring now in detail to the drawings, especially FIGS. 1 through 7, the gun comprises a body 10 from which extends a barrel 12. Mounted in the body beneath the barrel and extending throughout the length of the gun is an elongated hollow tube 14. The body 10 has a pistol grip portion 15 integral therewith. The tube 14 is adapted to hold a power cartridge such as that denoted at 20 which is filled with a compressed gas, such as carbon dioxide. The cartridge is adapted to be inserted in the muzzle end of the tube 14 to rest against a nut 21 threaded in a valve block 25, which is secured within and substantially midway between the ends of the tube 14 by pin screws 26 (see FIG. 7). The forward end of the tube 14 is closed by a threaded cap 27 to which is attached a piercing block 28 having a piercing projection 29 for releasing the gas from the cartridge 20. The interior of the valve block 25 is provided with a chamber 31 which communicates with a radial passage 33, which passage leads into the breech end of the barrel 12. A poppet valve 35 having a gasket 36, is mounted in the chamber 31 and is constantly urged against a valve face 37 of the block 25 by a coil spring 38. In its closed position this valve prevents the gas in the chamber 31 from entering the radial port 33. The gas from the cartridge 20 is prevented from escaping through the front portion of the tube 14 by an O-ring 41; and an O-ring 42 prevents the escape of gas between the walls of the valve block 25 and the tube 14.

A cylindrical hammer 45 is slidably mounted in the tube 14 behind the valve block 25, and has an axial opening 46 into which a reduced diametrical portion 47 of the valve block 25 is adapted to slidably fit. The reduced diametrical portion 47 has an axially extending bore 48, the forward end of which communicates with the radial port 33, and the rear end of which communicates with the cylindrical opening 46. The poppet valve 35 is adapted to be opened by a valve rod 55 which seats at one end in the valve 35, and which slides in a bore in the portion 47 of the block 25. This rod has an enlarged portion 56 intermediate its ends that engages the gasket 36.

The rear portion of the cylindrical tube 14 is closed by a plug 51. A thrust pin 50 which extends through the body 10 fastens the tube 14, and the plug 51. A back plate 52 covers the rear of the frame 10 and the plug 51. The hammer 45 is constantly urged forward by a coil spring 53 which surrounds a reduced diameter portion of the hammer and is interposed between the plug 51 and the hammer. The square die spring 54 is mounted in a recess in the hammer 45, and is also interposed between the plug 51 and the hammer. This spring 54 serves as a buffer spring to cushion the return of the hammer to its cocked position. The thrust pin 50 also takes the shock of the returning hammer. The hammer 45 is held in a cocked position as shown in FIG. 1, against the force of the coil spring 53 by a projection 57 on a sear 58 which is pivotally mounted in the body 10 by a pin 61, and is constantly urged into a slot 62 of the tube 14 by a coil spring 63. When the sear is released, the

spring 53 forces the hammer forward to cause the valve stem 55 to open the poppet valve 35 to permit gas to escape from the chamber 31 into the barrel through the radial port 33.

A trigger 65 is pivotally mounted in the body 10 by a pin 66. A coil spring 67 constantly urges the trigger 65 in a counterclockwise direction as viewed in FIG. 1, and also constantly urges a lever 68, which is pivotally mounted at 71, in a counterclockwise direction so that its shoulder 72 is held in engagement with the sear 58 to hold the sear in locking engagement with the hammer 45. A pin 73 limits the counterclockwise movement of the trigger 65 as urged by the spring 67. There is a lever 75 pivotally connected to the trigger 65. This lever 75 has a lip 76 which is adapted to engage the shoulder 78 of lever 68 when the parts are in the positions shown in FIG. 1.

The pulling of the trigger 65 in a clockwise direction, as viewed in FIG. 1, pulls the lever 75, a predetermined distance in a longitudinal direction towards the muzzle end of the gun. The lip 76 of lever 75, pulls the lever 68 in a clockwise direction against the force of the spring 67, which causes its shoulder 72 to become disengaged from the bottom edge of the sear 58. The spring 53 is now able to force the hammer 45 forward to push the projection 57 of the sear 58 out of the slot 62 against the resistance of the spring 63.

Pivotally mounted at 82 in the body 10 is a stop lever or sear 80. This sear is constantly urged counterclockwise about its pivot 82 by a coil spring 85, and has a projection 81 that is adapted to extend through a slot 86 in tube 14, and it has a laterally-extending lug 83 on which the lever 75 is adapted to rest in the position shown in FIG. 1. The coil spring 85 is attached to the body 10 at one end, and to the lever 75 at its other end, and constantly urges the lever 75 and the sear 80 in a counterclockwise direction to cause the sear to seat against the rear edge of an opening 86 and to cause the lip 76 of lever 75 to engage with shoulder 78 of lever 68. A manually-operable safety pin 88 is movable transverse to the plane of the trigger 65 to engage in notch 89 of the trigger to prevent accidental actuation of the trigger.

The body 10 of the gun has an elongated cylindrical magazine 90 formed therein (see FIGS. 3 and 6) which opens at its forward end in a slot 91, FIGS. 3 and 6, formed in the body 10 at the breech end of the barrel 12. The rear of the magazine opening is closed by a screw 92. A slidable plug 93 is urged toward the slot 91 by a coil spring 94 which is interposed between the bolt 92 and the plug 93. A pin 95 is attached to the plug 93 and projects outward from the body 10 through an axial slot 96 extending throughout the length of the magazine 90. A recess 97 is transversely formed in the slot 96 towards the rear thereof to retain the pin 95 therein, when loading projectiles, such as pellets 98 in an oepning 99 formed near the forward end of the magazine.

A transfer arm 101 is pivotally mounted in the slot 91 by a cylindrical rod 103. The transfer arm 101 is provided with an axial opening 105 extending therethrough, which is adapted to communicate with the forward end of the magazine 90 for receiving the first of a column of pellets 98. As the width of the arm from front to rear is equal to the length of one pellet 98, and its pivots with close tolerance in the slot 91, only one pellet can enter the opening 105 of transfer arm 101 at one time.

The body 10 is also formed with a bore 110 which is axially aligned with the barrel 12, and opens at its forward end into the slot 91. A pellet pusher or bolt 112 is slidably mounted in the bore 110 and has a pin 113 attached at one end transversely to its axis. The other end of the pin 113 extends through an elongated slot 114 in the body 10 and the tube 14, and is rigidly attached to the hammer 45. An O-ring 126 surrounding a reduced diametrical portion 125 of the pusher 112 prevents

gas from passing the bolt or pusher 112 when the gun is fired.

The body 10 has an opening 115 (see FIG. 4) formed therein which communicates at its forward end with the slot 91. A bar 116 of rectangular cross section, which is integrally attached to the pivotal rod 103 is mounted in the opening 115. The bar is twisted at 117 a predetermined number of degrees, the purpose of which will be explained hereafter. A tang 118 having an opening 119 (FIG. 2) of the same cross section as the bar 116 is adapted to slidably fit on the bar 116. The tang 118 extends through a slot 114 in the tube 14 and is attached to the reduced diametrical portion of the hammer 45. A coil spring 120 is torsionally connected to and pushes against the rod 116 thereby urging the transfer arm 101 against the forward side of the slot 91 and keeping the opening 105 aligned with the bore of the barrel 12. Spring 53 holds the tang 118 against the shoulder formed at the juncture of the reduced and large diameter portions of the hammer.

To charge the gun, a cartridge 20 is inserted from the front into the tube 14 and the cap 28 is screwed tightly thereon so that its piercing projection 29 pierces the cartridge 20. To release the gas, the hammer 45 is pulled back by its handle 130 slightly, permitting the poppet valve 35 to close. Then the member 29 is unscrewed one quarter to one-half turn to remove the piercing pin 29 from the cartridge, and the gas fills the chamber 31 in the valve block 25. The magazine 90 is filled with a plurality of pellets 98, through the opening 99 in the body 10, and the projection 95 is released from the recess 97 to urge the column of pellets forward to rest against the flat surface of the transfer arm 101. The hammer 45 is then initially cocked or pulled rearward in the body 10 by a manual cocking mechanism or handle 130 (FIGS. 1 and 2). The initial cocking of the gun pivots the transfer arm 101 to align its opening 105 with the magazine 90 so that the first of a column of pellets 98 in the magazine is urged into the opening 105 and the tang 118 surrounds that portion of the bar 116 behind the twisted portion 117.

The gun is now ready for firing. To fire the gun, the trigger 65 is pulled, which causes the vertical lever 68 to disengage the bottom edge of the sear 58 so that the hammer 45 carrying the breech bolt 112 and the tang 118 begins moving forward in the tube 14. The tang 118 first reaches the twisted portion 117 of the rod 116 to pivot the transfer arm 101 thereby shifting the pellet 98 into alignment with the barrel 12. The spring 120 holds the arm 101 in correct alignment with the barrel.

After the transfer arm 101 has pivoted so that its opening 105 is out of communication with the magazine 90, the remainder of the pellets 94 are held in the magazine by the flat surface of the transfer arm 101.

During forward movement, the hammer 45 engages the projection 81 of the sear 80. This pivots the sear 80 in a clockwise direction as viewed in FIG. 1, lifting the horizontal lever 75 upward so that its lip 76 disengages the lip 78 so that the spring 67 urges the lever 68 against the depressed sear 58. The travel of the hammer in a forward direction also causes the breech bolt 112 to enter the opening 105 pushing the pellet 98 therefrom, and into the barrel 12 in firing position. The hammer then strikes the valve stem 55 to open the valve 35 thereby permitting gas to escape from the chamber 31 into the radial port 33 and the barrel 12 for firing a projectile out of the barrel. The gas which escapes from the chamber 31 also enters the axially extending bore 43 and exerts a pressure in the chamber 46 of the hammer 45 so as to drive the hammer 45 towards the rear of the tube 14 against the pressure of the spring to its cocked position, as shown in FIG. 1. The spring 54 cushions the return of the hammer. It is apparent that the cocking action of the hammer causes the breech bolt 112 to be withdrawn

from the barrel 12 and the opening 105 of the transfer arm 101. This rearward travel of the hammer 45 also carries the tang 118 again past the twisted portion 117 of the bar 116 after withdrawing the bolt 112 from the opening of the transfer arm 101, thereby rotating the transfer arm 101 in a clockwise direction, as viewed in FIG. 6 to again align its opening 105 with the magazine 90 so that a subsequent pellet enters the opening 105 under urging of spring 94 and follower 93. When the hammer 45 reaches its cocked position, the sear 58 which is urged counterclockwise by the spring 63, snaps back into the interior of the tube 14 and is locked therein by the shoulder 72 on the lever 68. This action permits the hammer 45 to become cocked even though the trigger 65 is held in a firing position. When the trigger 65 is released the lever 75 moves axially towards the rear of the gun so that its lip 76 engages the lip 78 of the lever 68 thereby permitting the trigger to again actuate the lever 68. Thus, it is seen that the action of the trigger 65 releases the hammer 45 with the operation of the hammer 45 conditioning the trigger mechanism so that the hammer will stay cocked.

It is apparent that the pulling of the trigger will again release the hammer and the sequence of events will be repeated. According to one embodiment of this invention, the magazine was adapted to hold 10 pellets, which could be fired in rapid succession.

It should also be noted that by removing the sear 80 the gun will fire in rapid succession as long as the trigger 65 is held in its operative position, because the vertical lever 68 will not reengage the sear 58 when the hammer is operated to its cocked position, thereby providing a fully automatic pistol.

The modified gun shown in FIGS. 8 and 9 has many parts which are identical to those used in the gun in FIGS. 1 to 7 inclusive; and such identical parts are designated by the same reference numerals as employed in FIGS. 1 to 7. Other parts similar to parts used in the gun of FIGS. 1 to 7 are designated in FIGS. 8 and 9 by numerals increased by 200. This gun comprises a body 210 into which is mounted a barrel 211. Mounted in the body 210 beneath the barrel and extending throughout the length of the gun is the elongated tube 14. The body 210 has a pistol grip portion 215 formed integral therewith. The tube 14 is adapted to hold a power cartridge, such as that denoted at 20, which is filled with a compressed gas, such as carbon dioxide. The cartridge is adapted to be inserted in the muzzle end of the tube 14 to rest against a ring 221 which is attached to a valve block 225. The valve block is secured within the tube 14 substantially midway between the ends thereof by the screws 26 (see FIG. 7). The forward end of the tube 14 is closed by the threaded cap 27 which carries the piercing block 28 having the piercing projection 29 for releasing the gas from the cartridge 20. The valve block 225 is provided with the chamber 31 which communicates with one end of a radial passage 233 formed in the valve block 225 and the body 210. The passage 233 is closed at its other end by a screw 236. Below the screw 236 and in alignment with the barrel 211 is a duct 234 which communicates with the passage 233 at one end and terminates at its other end at the rear face of slot 91 (see FIG. 9). A duct 235 is formed in the body 210 in alignment with the duct 234 and with the barrel 211 communicating at its front end with the barrel. The rear end of duct 235 terminates at the front face of the slot 91.

The valve block 225 has the poppet valve 35 which is mounted in the chamber 31 and is constantly urged closed against the valve face 37 by the coil spring 38. In its closed position, this valve prevents the gas in the chamber 31 from entering the passage 233 and the passage 234.

As in the previous embodiment, a cylindrical hammer 245 is slidably mounted in the tube 14 behind the valve block 225, and has the axial opening 46 into which the reduced diametrical portion 47 of the valve block 225 slidably fits. The chamber 46 and the passage 233 are connected by the axial bore 48 in the portion 47 of the valve block. The valve rod 55 is slidably mounted in a bore of the block 225 for opening the poppet valve 35.

The rear of the cylindrical tube 14 is closed by a plug 251 which is secured by a thrust pin 250 that extends through the body 210, the tube 14, and the plug 251. The hammer 245 is constantly urged forward by the coil spring 53 which surrounds the reduced portion of the hammer and is interposed between the plug 251 and the hammer. A spring 254 is mounted on a projection 252 of the block 251. This spring 254 serves as a buffer spring to cushion the return of the hammer to its cocked position. The thrust pin 250 also takes the shock of the returning hammer. As in the previous embodiment the hammer 245 is held in its cocked position by the projection 57 on the sear 58, which is pivotally mounted in the body 10. When the sear is released, the spring 53 forces the hammer forward to open the poppet valve 35 to permit gas to escape from the chamber 31 into the passage 233 and the passage 234.

A trigger 265 is pivotally mounted in the body 210 by a pin 266. A coil spring 273 interposed between the body and the trigger constantly urges the trigger 265 in a counterclockwise direction as viewed in FIG. 8. The lever 68 is pivotally mounted in the body by a pin 71. A spring 267, which is mounted on the pin 71 has one arm engaging the pistol grip portion of the body, and its other arm engaging the member 68 constantly to urge the member 68 in a counterclockwise direction so that its shoulder 72 is held in engagement with the sear 58 to hold the sear in locking engagement with the hammer 245. A lever 275 is pivotally mounted on the trigger 265 at 276. This lever 275 has a lip 76 which is adapted to engage the shoulder 78 of lever 68 when the parts are in the position shown in FIG. 8.

As in the previous embodiment, the stop lever or sear 80 is pivotally mounted in the body 10 at 82. This sear has a projection 81 that extends through the slot 86 in the tube 14, and it has the lug 83 which extends normal to the plane of the sear 80 on which the lever 275 is adapted to rest in the position shown in FIG. 8. The coil spring 85 urges the lever 275 in a counterclockwise direction as viewed in FIG. 8, urging the sear 80 in a counterclockwise direction to bear against the rear edge of opening 86.

The body 210 of the gun is provided with an elongated cylindrical magazine similar to the magazine in the previous embodiment, which opens at its forward end in the slot 91.

The transfer arm 101 is pivotally mounted in the slot 91 by the cylindrical rod 103, and has the axial opening 105 extending therethrough, which is adapted to communicate with the forward end of the magazine for receiving the first of a column of pellets similar to the embodiment previously described. Axially attached to the rod 103 is the bar 116 on which is slidably mounted the tang 118. The bar herein is twisted at 117 a predetermined number of degrees.

The gun is charged with compressed gas, the magazine is loaded with pellets, and the hammer 245 is initially cocked as in the previous embodiment. The initial cocking of the gun also pivots the transfer arm 101 to align its opening 105 with the magazine 90 so that the first of a column of pellets in the magazine is urged into the opening 105.

To fire the gun, the trigger 265 is pulled, which releases the hammer 245. When the tang 118 reaches the twisted portion 117 of the rod 116, the transfer arm 101 is pivoted into alignment with the barrel 12. With the transfer arm 101 in this position, its opening 105 is aligned between passage 235 and the passage 234. During this forward movement, the hammer 245 engages the projection 81 of the sear 80 which pivots the sear 80

to lift the lever 275 upward to release the sear 58. The hammer then strikes the valve stem 55 to open the valve 35 thereby permitting the gas to escape from the chamber 31 into the radial passage 233 and the passage 234. The gas then strikes the pellet contained in the opening 105 driving it into the passage 235 and through the barrel 211. As in the previous embodiment the gas, which escapes from the chamber 31, also enters the bore 48 and exerts pressure in the chamber 46 to drive the hammer 245 toward the rear of the tube 14. The rearward travel of the hammer merely causes the tang 113 to pivot the transfer arm 101 so that its opening 105 is realigned with the magazine and the next subsequent pellet enters the opening. When the hammer 245 reaches its cocked position, the sear 58 in cooperation with the trigger mechanism locks the hammer in its cocked position in a way similar to the previous embodiment. A slidable pin 288 is positioned to obstruct the trigger 265 in one position to provide the safety mechanism therefor.

While the embodiments of the invention have been described in connection with the construction and operation of a semi-automatic pistol using carbon dioxide cartridges as the propellant, it is understood that it may be employed in any type of a gas operated or pneumatically operated gun, such as a rifle.

While the invention has been described in connection with two embodiments thereof, it will be understood that it is capable of further modification, and this application is intended to cover any variations, uses, or adaptations of the invention following, in general, the principles of the invention and including such departures from the present disclosure as come within known or customary practice in the art to which the invention pertains and as may be applied to the essential features hereinbefore set forth, and as fall within the scope of the invention or the limits of the appended claims.

Having thus described my invention, what I claim is:

1. A gas powered gun, comprising a body having a barrel, said body having a chamber therein for containing a supply of gas under pressure, a valve normally closing off said chamber, said body having a passage, one end of which is aligned with said barrel but spaced therefrom, the other end of said passage being in communication with said chamber when said valve is opened, a hammer movable in one direction for opening said normally closed chamber, a transfer member pivotally mounted on said body for oscillation about an axis extending parallel to said barrel, said transfer member having an opening therethrough for holding a projectile, and means connecting said hammer to said transfer member and to said valve to successively, during motion of said hammer in said one direction, move said transfer member so that its opening is aligned between the one end of said passage and the barrel, and to open said valve to permit gas to flow through said passage, through said opening into said barrel.

2. A gas powered gun comprising a body having a barrel, a hammer axially slidable relative to said barrel to assume a cocked and a firing position, said body having a chamber therein for containing a supply of gas under pressure, a valve operable when opened by said hammer to release gas from said chamber for firing a projectile from said barrel, trigger means for releasably holding said hammer in its cocked position and movable for releasing said hammer to a firing position to open said valve, said body having a bore formed therein axially aligned with said barrel, said body having a slot formed transversely to the barrel, said slot spacing the breech end of said barrel from said bore, a magazine formed in said body and adapted to hold a plurality of pellets, the delivery end of which magazine communicates with said slot, a transfer arm mounted to pivot in said slot transversely of said barrel, said transfer arm having an opening adapted to register with the delivery end of said magazine when the transfer arm is in one limit position and with said barrel when the transfer arm is at its other limit position, means in said magazine urging a projectile into said opening when the transfer arm is in said first position, a bolt slidably mounted in said bore for movement from one end thereof into said transfer arm opening, means connecting said hammer and said transfer arm to move its opening from a position of registry with the barrel to a position of registry with the delivery opening of said magazine when the hammer is in a cocked position, and means connecting said bolt and said hammer to hold said bolt wholly within said bore when the hammer is in said cocked position.

3. A gas powered gun, comprising a body having a barrel, said body having a chamber therein for containing a supply of gas under pressure, a normally closed valve for shutting off said gas, a hammer slidable to assume respectively a cocked and a firing position, said hammer being operable to open said valve to release gas to fire a projectile from the barrel, and means actuated upon opening of said valve to return the hammer to its cocked position, a transfer arm pivotally mounted on said body for oscillation about an axis parallel to the axes of said barrel and having a pocket therein for holding a projectile, and means connecting said hammer to said transfer arm to pivot said transfer arm, during movement of said hammer to said firing position, from a position in which said pocket is in alignment with the magazine to a position in which said pocket is in alignment with the barrel.

4. A gas powered gun, comprising a body having a barrel, said body having a chamber therein for containing a supply of gas under pressure, a hammer slidable in opposite directions to assume respectively a cocked or a firing position, a normally closed valve aligned with said hammer to be opened thereby upon movement of said hammer to its firing position, and operable when opened by said hammer to release gas from said chamber for propelling a projectile from said barrel, trigger means for releasably holding said hammer in its cocked position and movable for releasing said hammer to firing position to open said valve, a bore axially aligned behind said barrel, a magazine formed in said body and laterally spaced from said bore and adapted to hold a plurality of projectiles, a bolt mounted in said bore and slidably movable with said hammer, a transfer arm mounted to pivot transversely to the axis of said barrel, said transfer arm having an opening to register with said magazine when said arm is in one position, and with said barrel when said arm is in another position, means attached to said transfer arm and said hammer to move said transfer arm transversely to the axis of said barrel upon the movement of said hammer to its firing position to transfer a projectile from said magazine into alignment with said barrel, means connecting said hammer to said bolt to move said bolt into said opening in said transfer arm to move said pellet into firing position in said barrel when said hammer is in firing position.

5. A gas operated gun, comprising a body having a barrel, said body having a chamber therein for containing a supply of gas under pressure, a hammer slidable in opposite directions to assume respectively a cocked or a firing position, a normally closed valve positioned to be opened by said hammer upon movement thereof to its firing position and operable when opened by said hammer to release gas from said chamber for propelling a projectile from said barrel, trigger means for releasably holding said hammer in its cocked position and movable for releasing said hammer to a firing position to open said valve, said body having a bore axially aligned behind the barrel, a magazine adapted to hold a plurality of projectiles, said magazine being laterally spaced from said bore, a bolt slidably mounted in said bore, said bolt being movable axially into and out of said barrel, a transfer arm mounted to pivot transversely to the axis of said barrel, said transfer arm having an opening there-

in adapted to register with said magazine or said barrel, the pivotal axis of said transfer arm extending parallel to the axis of the barrel and being laterally spaced from said hammer, means connecting said transfer arm to said hammer and to said bolt and operative upon movement of said hammer to firing position to first pivot said transfer arm to move said opening from registry with the magazine to registry with the barrel, and to thereafter move said bolt through said opening to move a projectile from said arm into firing position in the barrel.

6. A gas powered gun comprising a body and a barrel, said body having a chamber therein for containing a supply of gas under pressure, a hammer slidable in opposite directions to assume respectively a cocked and a firing position, normally closed valve means positioned to be opened by said hammer upon movement thereof to its firing position and operative when opened by said hammer to release gas from said chamber for propelling a pellet from said barrel, trigger means releasably holding said hammer in its cocked position and movable for releasing said hammer to a firing position to open said valve means, said body having a bore formed therein in axial alignment with said barrel, a slot formed transversely to the barrel and spacing the bore from said barrel, a magazine formed in said body, said magazine being laterally spaced from said bore, the delivery end of said magazine opening into said slot, a transfer arm mounted to pivot between two positions in said slot transversely to said barrel, cam means conneecting said transfer arm to said hammer, a bolt slidably mounted in said bore, the forward end of said bolt being positioned to enter said barrel when said hammer is in its firing position, means connecting said bolt to said hammer, said transfer arm having an opening therein adapted to align with the magazine when said arm is in one position and with the barrel when said arm is in its other position, said opening being aligned with the magazine when the hammer is in a cocked position, said cam means being shaped to pivot said transfer arm to align its opening with the barrel during the movement of said hammer to its firing position, and said cam means pivoting said transfer arm to align said opening with the magazine upon the movement of said hammer to cocked position.

7. A gas powered gun having a barrel, a magazine adapted to hold a plurality of projectiles, a pivotal transfer arm having an opening for holding a projectile, said transfer arm being oscillatable in a plane transverse to said barrel to move said opening from a position of registry with the magazine to a position of registry with the barrel and vice versa, a reciprocable hammer movable from a cocked to a firing position, means connecting said hammer to said transfer arm to effect movement of said opening to its second-named position on movement of the hammer to its firing position, and to effect movement of said opening to its first-named position upon movement of said hammer to its cocked position, a chamber for holding gas under pressure, a valve normally closing said chamber and positioned to be opened by said hammer upon movement of said hammer to firing position, a duct connecting said chamber to said opening to cause said gas to force a projectile out of said opening into and through said barrel when the valve is opened and said opening in the transfer arm is in registry with said barrel, and a further duct connecting said chamber with said hammer when said valve is opened to move said hammer by gas pressure to a cocked position after said valve is opened.

8. A gas-powered gun having a barrel, a chamber adapted to contain gas under pressure, a magazine for holding a plurality of projectiles, a holder having a pocket therein for a projectile, a reciprocable hammer connected to said holder for moving said holder about an axis parallel to the axis of said barrel from a position in which said pocket registers with said magazine to a position in which said pocket is in alignment with said barrel, a duct for conducting gas from said chamber against one end of the projectile when said pocket is in alignment with said barrel to force the projectile from said pocket into and through said barrel, a normally closed valve for preventing flow of gas from said chamber into said duct, said valve being disposed to be opened by said hammer at the end of the movement of said hammer in a direction to move said pocket into alignment with said barrel, means for moving said hammer in said direction, and a manually-operable trigger for releasably holding said hammer in inoperative position.

9. A gas powered gun comprising a body having a chamber therein for containing a supply of gas under pressure, a valve normally closing said chamber, a barrel secured to said body, a duct for conducting gas from said chamber to said barrel, when said valve is open, to propel a projectile through said barrel, a magazine connected to said body and adapted to hold a plurality of projectiles, a transfer member reciprocably mounted on said body and having a pocket for holding a projectile, a hammer reciprocably mounted on said body for movement between cocked and firing positions, respectively, a movable trigger for releasably holding said hammer in its cocked position, means connecting said hammer to said transfer member to move said transfer member from a position in which said pocket registers with said magazine to a position in which said pocket registers with said barrel, upon movement of said hammer to its firing position, and to move said transfer member back to a position in which said pocket registers with said magazine upon movement of said hammer to its cocked position, means moving said hammer from its cocked position to its firing position upon actuation of said trigger to hammer-releasing position, said hammer being so disposed that at the end of its movement to its firing position it opens said valve to thereby propel a projectile from said barrel, and means for applying gas from said chamber to said hammer upon the opening of said valve to return said hammer to its cocked position.

10. A gas powered gun as claimed in claim 9 wherein said reciprocable transfer member pivots about an axis which extends parallel to and is spaced from the axial center line of said barrel.

References Cited in the file of this patent

UNITED STATES PATENTS

1,078,487	Dickey	Nov. 11, 1913
1,677,810	Bond	July 17, 1928
2,204,370	Lefever	June 11, 1940
2,204,372	McHenry	June 11, 1940
2,505,972	Johnson	May 2, 1950
2,554,116	Monner	May 22, 1951
2,594,185	Lefever	Apr. 22, 1952
2,618,254	Wells	Nov. 18, 1952
2,699,767	Mangolini	Jan. 18, 1955
2,811,150	Marocchi	Oct. 29, 1957
2,817,328	Gale	Dec. 24, 1957
2,881,752	Blahnik	Apr. 14, 1959